Solid-Fuel Ramjet Assisted Gun-Launched Projectiles: An Overview

S. Krishnan
Professor of Aerospace Engineering
Indian Institute of Technology Madras, Chennai - 600 036, India

[Presented as a plenary paper at the Fifth National Conference on Airbreathing and Aerospace Propulsion, Defence Research and Development Laboratory, Hyderabad, India, Dec. 21-23, 2000]

Abstract

The principles of construction and operation of a solid-fuel ramjet assisted gun-launched projectile are briefly explained. A concise global-survey of the projects on solid-fuel ramjet powered missiles is presented. Pseudovacuum trajectory is a ballistic trajectory in air of a powered projectile where the thrust always balances the drag. Easy and accurate predictability and insensitiveness to external disturbances are the two major advantages of the pseudovacuum trajectory. This trajectory can be easily achieved for gun launched projectiles by the use of solid fuel ramjets. A preliminary-sizing procedure for solid fuel ramjet powered gun launched projectile is presented. Also, presented are the ramjet-control requirements for a typical 155-mm gun launched projectile. The control requirements are minimal, demonstrating the "self throttling characteristics" of solid fuel ramjets. For the typical 155-mm gun launched projectiles, following pseudovacuum trajectories using solid fuel ramjets, the maximum range is found to be in excess of 40 km.

Introduction

Incorporating into it a propulsion system can substantially increase the velocity and range of a gun-launched projectile. Between the two possible propulsion systems, rocket and ramjet, the latter for the given total weight can provide a higher range. Between the two ramjet types, namely the solid-fuel ramjet (SFRJ) and the liquid-fuel ramjet, the former

represents a simpler design due to the absence of any moving part in its basic configuration. Quite a few research projects have been reported in the development of gun-launched projectiles and other missiles powered by SFRJs.[1-9]

SFRJ Assisted Gun Launched Projectiles

The typical construction of an SFRJ-assisted gun-launched projectile is as given in Fig. 1. It is of two parts. For a “slide fit", the front part is of a diameter a little less than the gun barrel diameter and this part houses a payload. At the nose of this front part is the inlet, closed by a frangible diaphragm. The rear part is of an outer diameter that is considerably less than that of the front part and it forms the engine in which the fuel grain is stored. When in gun barrel, a one-way valve inside the projectile (not shown in the figure) separating the front and the rear parts, together with an obturator on the periphery, serves as a piston.

The operating principle of an SFRJ-assisted gun-launched projectile is as follows. On firing, the gun-propellant combustion-gases fill in the annular gap between the gun barrel and the rear part, and the space within the engine (fuel grain-port, aft mixing chamber, and nozzle passage). Forcing the piston, these high-pressure gases eject the projectile into the atmosphere at a supersonic Mach number of around two or more.

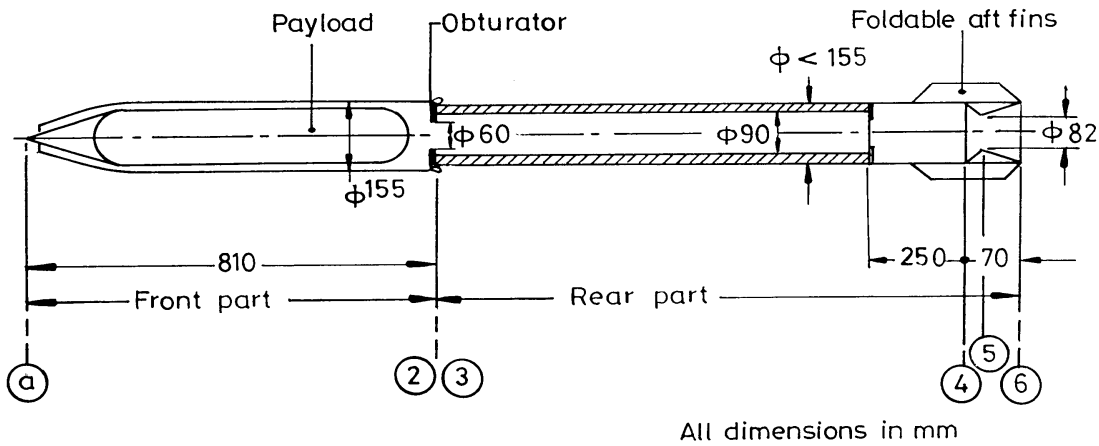

Fig. 1 Gun launched SFRJ-powered projectile.

Now, for the projectile ejected into the atmosphere, the opening of intake by the release of the frangible diaphragm and the gushing of air into the SFRJ take place in quick successions. Air flows in with a relatively high stagnation temperature of around 540 K or more. Having been exposed within the gun barrel to high-temperature and very-high-pressure gases (a few thousand bars!) and now on being exposed to the high-temperature air, the surface of the fuel grain automatically gets ignited and releases combustion products. The hot combustion products thus released are accelerated through the nozzle with an exit momentum-rate greater than the inlet value, thereby producing a thrust.

When an SFRJ flies at a lower altitude, as the air there is dense, it ingests large air mass flow rate with high values of air mass flux, pressure, and temperature in the combustion chamber. The requirement of correspondingly high fuel flow rate for this large air mass flow rate, can be met since the regression rate of fuel is proportional to air mass flux, pressure, and temperature. At higher altitudes, as the air there is thin, the SFRJ ingests low air mass flow rate with reduced values of air mass flux, pressure, and temperature in the combustion chamber. Also the requirement of correspondingly reduced fuel flow rate at this condition can be met because of the above regression-rate dependency. This "self-throttling" characteristics of SFRJ permit high performance operation from sea level to high-altitude conditions.

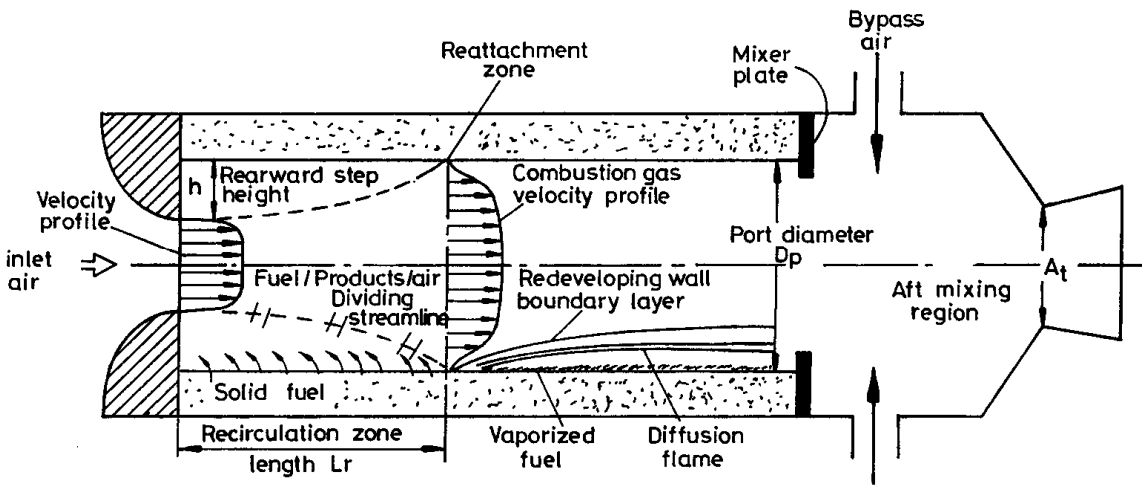

Fig. 2 Combustion chamber flow field in a solid fuel ramjet.[10, 11]

Combustion Processes

A schematic diagram of an SFRJ combustion and nozzle flow region is shown in Fig. 2.[10, 11] The combustion chamber is basically a hollow cylinder in which a cylindrical fuel grain, usually with a circular perforation, is placed. Incoming-air flows through the fuel port. An often used combustor geometry consists of three different regions and features: 1) the head end with the air inlet and rearward step, 2) the main combustor section where the solid fuel grain is placed, and 3) the aft mixing-chamber often with a mixer plate at its front.

The combustion in the solid fuel grain is mostly through boundary layer diffusion flame and hence slow and relatively not very efficient. Therefore, for the enhancement in the combustion efficiency the aft mixing-chamber is necessary. In this the reaction between fuel and air is completed due to better mixing. Sometimes the aft mixing-chamber is fitted with a bypass air injection. In the case of certain metallized fuels being used, introducing swirl to inlet airflow and/or injecting bypassed air into the aft mixing-chamber are found necessary to achieve high combustion efficiency.

Pseudovacuum Trajectory

A pseudovacuum ballistic trajectory of a projectile in air is the one in which the drag experienced is always balanced by the thrust produced by the propulsive unit.[1] Evidently in addition to the substantially enhanced velocity and range, the adoption of the pseudovacuum ballistic trajectory to an aerodynamically stable “fire-and-forget” projectile has two principal advantages. The first one is the easy and accurate predictability of the trajectory.

The second advantage in adopting the pseudovacuum trajectory is the insensitiveness of the trajectory to external disturbances such as winds. Any crosswind will exert a force at the center of pressure of the projectile causing it to weathercock into the wind so that the resultant relative wind direction is in line with the projectile axis that subtends an angle to the

original trajectory. The resulting enhanced drag (due to the increase in the relative wind velocity) will be countered by an increased thrust from the propulsive unit maintaining the projectile on its original pseudovacuum trajectory. Head winds and tail winds will be similarly compensated by the thrust = drag control. In order to compensate any asymmetry, the projectile is usually given a spin (about 10 % that of a conventional projectile) and this results in a small computable drift of the trajectory.[2] Computational studies including transients with typical atmospheric profiles of real weather effects have shown that pseudovacuum ballistic trajectories under the thrust = drag control can be flown with a high precision leading to a circular error probable of even one order of magnitude less than that from an equivalent conventional trajectory ("standard round" or rocket assisted).[2,12]

Among the options to achieve the pseudovacuum ballistic trajectory, the SFRJ along with a sensitive accelerometer gives the simplest and, hence, the least expensive solution. The accelerometer here senses any variation in axial acceleration and produces a signal that can monitor the engine mass-flow-rate until the produced thrust balances the drag. Reference 2 presents further detailed discussion on the essential elements of accelerometer control system for SFRJ in a gun-launched projectile. The control of engine mass flow rate can be achieved either by a bypass control of inlet air or by a regression-rate control of fuel. In the first method a required quantity of inlet air is bypassed into the atmosphere without it participating in combustion. This method of bypass control of inlet air is relatively an old one and is found adopted in many operating systems (for example, YF-12 aircraft and Concord use bypass control of inlet air). [13,14] In SFRJ, this method was adopted in a 203-mm gun-launched projectile developed by Nordon Systems.[1] But, the second method is of recent origin and is specifically proposed for SFRJ and is known as "tube-in-hole" technique.[15]

Projects on Solid Fuel Ramjets

SFRJ has been a propulsion system of research-interest at least for the last thirty years. Based on open literature, the countries which are taking interest in SFRJ application in missile system are China (Taiwan), Germany, Israel, Netherlands, Russia, Sweden, and USA.[7-9, 16-19]

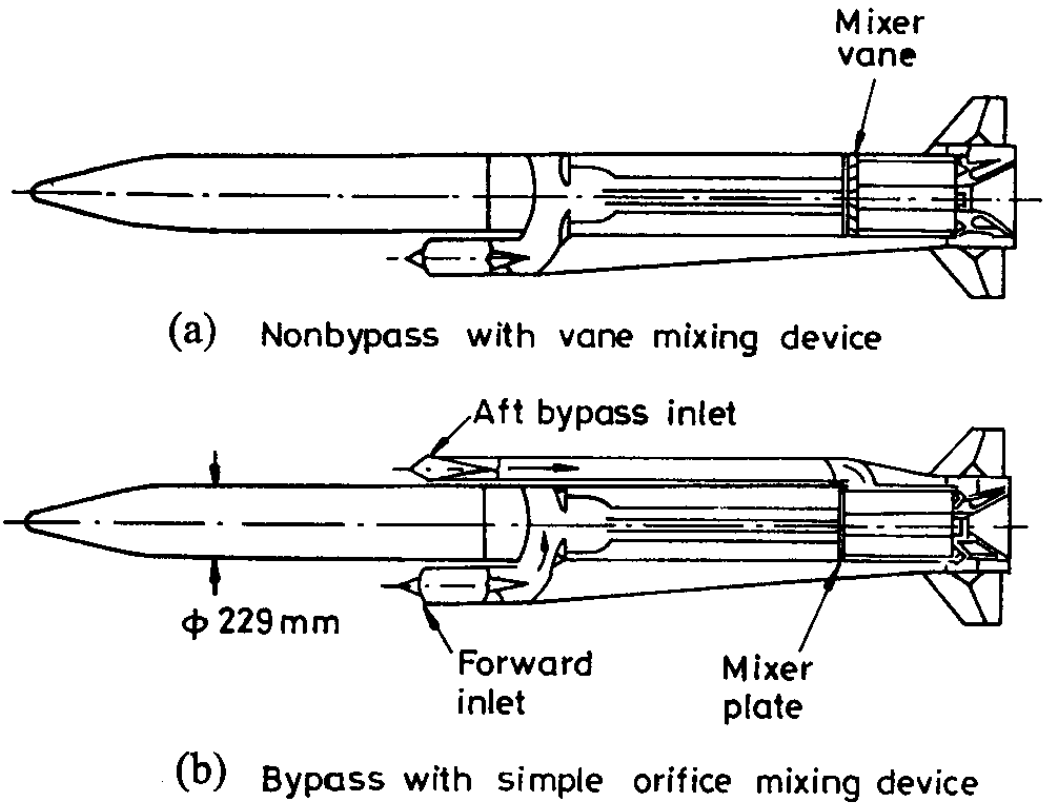

Fig. 3 Solid fuel ramjet powered missiles.[20]

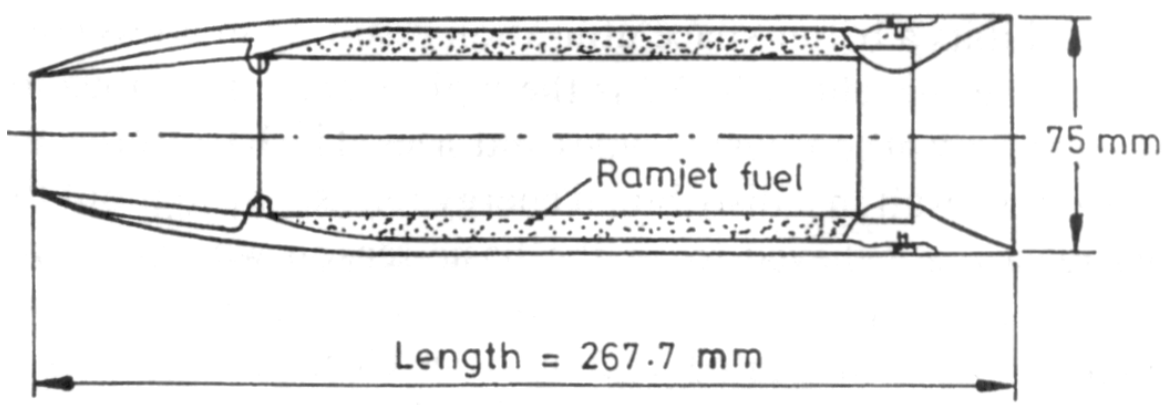

Fig. 4 SFRJ-assisted 75-mm gun launched projectile.[16]

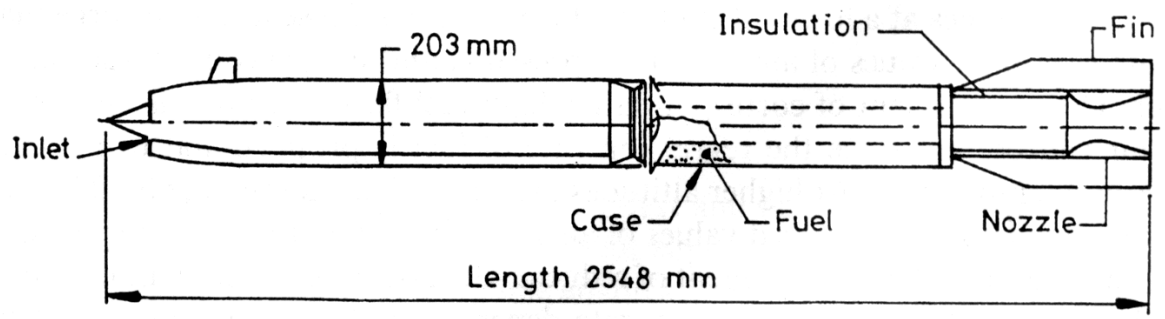

Fig. 5 SFRJ assisted 203-mm M110A-2 cannon launched projectile.[16]

The profiles of the four types of SFRJ powered missiles/projectiles reported from USA are shown in Figs. 3 to 5.[16, 20] The 229-mm (9 inch) air-to-air, air-to-surface, and surface-to-air missile shown in Fig. 3 has an SFRJ with solid rocket booster. The US Army Ballistic Research Laboratory designed the 75-mm SFRJ propelled gun-launched projectile shown in Fig. 4. This 75-mm projectile is of two versions: 1) spin-stabilized version of 268 mm length, and 2) fin-stabilized one of length a little longer than 268 mm. The missiles adopt the very high pointing accuracy of a gun system. The missile projectile uses a tubular unit into which is cast the solid fuel that generates sufficient thrust after gun-launch to sustain the projectile at its launch velocity. This results in a significant enhancement in range. The projectile does not need an igniter. And, the fuel-autoignition capability with air under the gun-launched condition was demonstrated as early as 1980. In 1984, Mermagen and Yalamanchili conducted free-flight tests of the fin-stabilized version with hydroxyl-terminated-polybutadiene (HTPB) solid-fuel.[6] They measured the velocity and drag versus range for these projectiles with different internal-configurations and compositions of HTPB fuel. The SFRJ generated about 1100 N of thrust during 1.6 s of burning time.

Nordon Systems of USA reported their studies on the SFRJ projectiles known as "cannon launched advanced indirect fire system (AIFS)" that was to be launched using the

M110A-2 cannon.[1-3] The projectile is of 203 mm (8 inch) diameter and 2548 mm (100 inch) length as shown in Fig. 5. It approximately weighs 114 kg and has a range greater than 60 km. By the control of air mass flow rate through the use of a sensitive accelerometer, this projectile is designed for pseudovacuum trajectory.[2] A fire and forget version of this projectile has a mix of submunitions as payload.

Reference 7 presents the development of SFRJ assisted gun launched projectile and air-to-air missile by Dutch, Figs. 6 and 7. Prins Maurits Laboratory and the Delft University of Technology in the Netherlands have conducted studies on gun launched SFRJ assisted "tank-to-tank" projectile known as "kinetic energy penetrator" (M = 4 and range 2500 m at sea level; 75 mm / 90 mm diameter).[7] An AGARD publication indicates the flight testing of an SFRJ projectile prior to 1992.[21] National Defense Research Establishment of Sweden has reported the development of a spin-stabilized SFRJ assisted anti-aircraft projectile (M = 4.3 and burn time = 2 to 3 s; 40 mm diameter and 200 mm length).[8, 9]

Preliminary Sizing of 155-mm Projectile

In view of the importance of SFRJ propulsion for gun launched projectiles a study was initiated at the Indian Institute of Technology Madras. The remaining part of this paper deals with the preliminary sizing of a 155-mm gun-launched projectile and its control requirements for pseudovacuum trajectories.

Certain basic SFRJ projectile-configurations for the 155-mm gun have to be first estimated before starting the calculation of control requirements for a pseudovacuum trajectory. For this, based on a separate study the dimensions of major components except 1) inlet diameter, 2) fuel grain length, and 3) nozzle throat diameter were arrived at (Fig. 1). By the same study the mass of the projectile, except that of combustion chamber (comprising of fuel grain, liner, and combustion-chamber shell), was estimated to be 51 kg, Table 1.

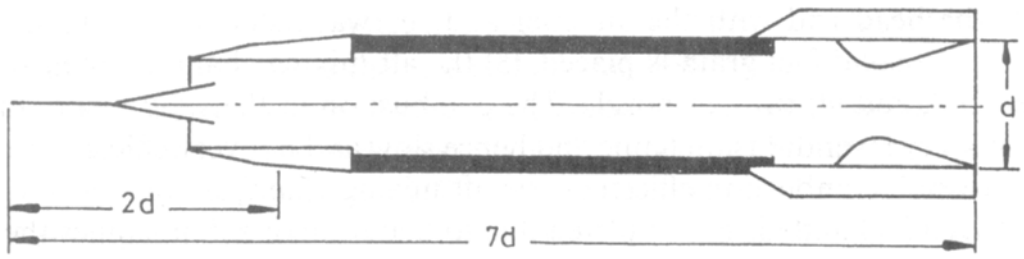

Fig. 6 Geometry of the SFRJ-assisted antitank missile.[7]

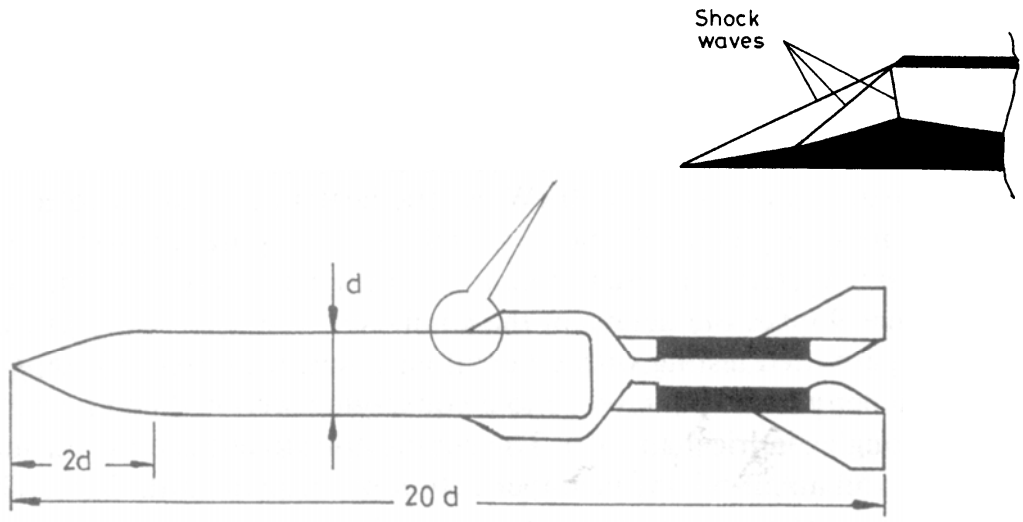

Fig. 7 Geometry of the high speed air-to-air missile.[7]

In order to complete the estimation of certain basic projectile configurations a "rubber-engine analysis" was carried out as per the assumptions and procedures given Ref. 22. In this analysis the inlet diameter, fuel-grain length, and nozzle-throat diameter are assumed to be infinitely variable. In order to maintain the simplicity of the preliminary design procedure, except the critical stagnation-pressure-recovery ratio of the inlet (r_{dc}) all stagnation-pressure-loss factors are taken to be constant; r_{dc} is assumed to follow a correlation of flight Mach number. The resulting gross pressure-loss-factor (excluding r_{dc}) of 0.81 appears to be conservative. Similarly a conservative value 0.9 was assumed for the combustion efficiency, η_b. For a detailed discussion on the figures of merit and procedure see Ref. 22.

Table 1 Calculated mass of various components of 155-mm projectile

Components	mass (kg)	
Intake outer shell and struts	17.0	
Seeker control and other electronics	3.0	
Center body	20.5	
Payload (specified)	7.0	
Nozzle	2.0	
Aft fins	1.5	
Sub total		**51.0**
Fuel grain and its liner	**?**	
Combustion-chamber shell	**?**	

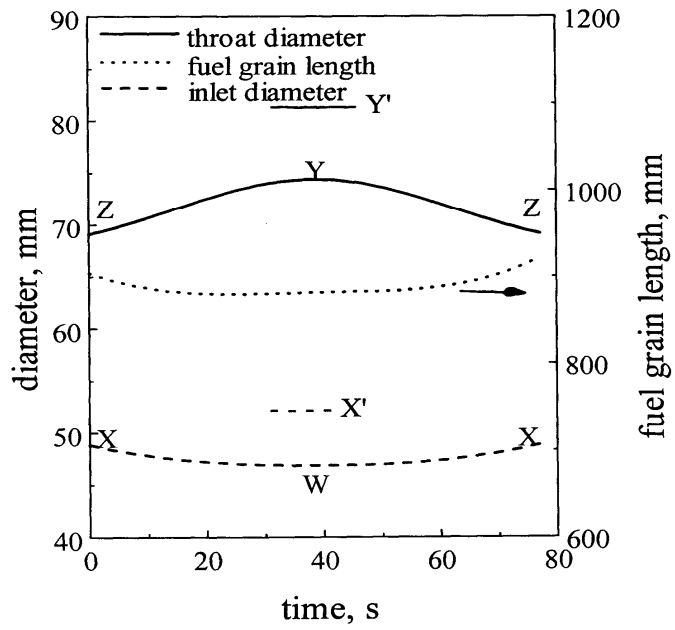

Fig. 8 Variation of fuel grain length, throat diameter, and inlet diameter. The launch angle is 35 deg, the nose ogival slenderness ratio is 2.5, the annular gap is 6.5 mm, and the constant A in the regression rate equation is 8.5 x 10^{-3}.

A typical result of the rubber-engine analysis, for launch angle = 35° and annular gap = 6.5 mm [half of the difference between the gun barrel diameter (155 mm) and projectile's rear-part diameter], is given in Fig. 8. From such results we note that, for given launch angle and annular gap, 1) the fuel-grain length is maximum at touchdown, 2) the throat diameter is varying from the minimum at launch/touchdown to its maximum at peak altitude, and 3) the inlet diameter is varying from the maximum at launch/touchdown to its minimum at peak altitude.

For an actual engine to operate with a minimal bypass control of inlet air or regression rate control of fuel, as the case may be, fixed values for fuel grain length, throat diameter, and inlet diameter are to be carefully chosen. Although this choice is done more or less by trials — using the results of the rubber-engine analysis as the base — a general guideline can however be followed as per the following. First, regarding the fuel grain length, an average value from rubber-engine results can be chosen. Nevertheless, this is treated as a parameter in the design analysis that is presented here. Second, regarding the choice of throat diameter, in order to pass the combustion products at all times let it be fixed, for the moment, at its maximum value, Y (Fig. 8). *In the case of bypass control of inlet air*, the chosen inlet diameter should have a value to ingest air mass flow rates at all times. Therefore, it may seem at first sight that the inlet diameter may assume the value X (Fig. 8). But in practice the inlet diameter as well as the throat diameter have to be still higher than their respective X and Y values for the following reason. If the inlet diameter of X had been chosen, most significantly at touchdown condition the resulting (air + fuel) mass flow rate has to pass through the throat of Y — “fixed for the moment” — instead of the corresponding smallest throat of Z (Fig. 8). Therefore, at this instant there should evidently be an enhanced stagnation-pressure-loss that comes from a supercritical operation of the inlet. But with the resulting reduced pressure

because of the supercritical operation (p_3), the ingested air cannot generate the required fuel flow rate for thrust = drag condition. Fuel regression rate is given by

$$\dot{r}_o = A\, G_a^{0.4}\, D_{pi}^{-0.25}\, T_{oa}^{0.4}\, p_3^{0.4} \tag{1}$$

Where G_a is the air mass flux through fuel grain port, D_{pi} is the instantaneous fuel grain port diameter, T_{oa} is the flight stagnation temperature, and p_3 is the static pressure at the port-entry (location 3, Fig. 1). Under the circumstances, a mass flow rate of air corresponding to the inlet diameter of X'— higher than the one corresponding to X — should be ingested. This higher mass flow rate of air along with the somewhat enhanced fuel flow rate (though not of stoichiometric but of fuel lean value) gives thrust = drag requirement without bypass control of inlet air at touchdown. Thus, the chosen inlet diameter X' is always higher than X and this difference (X' - X) depends on the fuel grain length. At other conditions, in order to realize thrust = drag requirement, the “tuning” of the air mass flow rate is necessary by bypassing a quantity of inlet air into the atmosphere without its participation in combustion. This bypassing cannot be to the extent of the rubber-engine base since the bypassed air in turn increases the total drag, demanding higher thrust than in the case of rubber engine. In order to achieve this demand, the engine mass flow rate is augmented by a suitably retracted bypass that generates more fuel flow rate, $\dot{m}_F$. To negotiate such augmented mass flow rates of engine at all times — most significantly at peak — the throat diameter has to be finally fixed at a value Y' even higher than Y. However, throat-to-port diameter ratio, D_t/D_p should be ≤ 0.91 for acceptable efficiency and stability of combustion.[16, 23, 24] Furthermore this limiting value of 0.91 is acceptable only with high values of pressure and temperature that occur at launch. However after launch as the fuel regresses the D_t/D_p reduces giving acceptable lower-values as the projectile ascends. Since initial port diameter D_p has already been fixed at

90 mm (see Fig. 1), the maximum value that D_t can assume is 82 mm. In fact this maximum-limit on D_t, *as* will be shown later, fixes the maximum possible launch angle for the projectile.

From the rubber-engine analysis with launch angles and annular gaps as parameters, as per the previous discussion, many trial engine configurations can be chosen. No detailed dimensional information is available on the configurations of operating SFRJs used for pseudovacuum trajectory projectiles. Nevertheless, the major dimensional ratios such as length to diameter ratio of engine or of whole projectile and mass per unit length of projectile of a typical trial configuration approximately match with those of a reported one.[1, 16] Each of these trial configurations is characterized by an annular gap, a value of '*A*' in the fuel regression rate equation, Eq. (1), a fuel grain length, a throat diameter, and an inlet diameter. And, the configuration can be analyzed for the control requirements. The most suitable configuration is the one which can be operated closest to the stoichiometric condition for the widest range of launch angles, with the least control and the smallest sliver!

Control for Pseudovacuum Trajectory

The projectile is assumed to have an axisymmetric inlet with a center body of 45°-cone angle. For the launch "design" Mach number, that is maximum, the diameter of the capture area is equal to the diameter of the chosen inlet area. But, for other lower Mach numbers the diameter of the capture area will be less, resulting in an off-design spillage of $\dot{m}_{as}$ (due to supercritical or critical mode)[13, 25] and this $\dot{m}_{as}$ is assumed to exit with zero axial-momentum. Wind conditions affect projectile drag and inlet operation (air mass-flow-rate, stagnation-pressure-recovery-ratio, and supercritical margin). The change in inlet operating conditions due to wind conditions tends to reduce the maximum launch angle capability and

demand wind conditions dependent controls. These can be calculated by a simple extension to the basic procedure that is given for no-wind condition.[22]

Several trial engine-configurations each characterized by an annular gap, a value of '*A*', a fuel-grain length, a throat diameter, and an inlet diameter were analyzed for the control requirements for the range of launch angle capability from 30° to 45°.[26, 27] This analysis indicates that the lower launch angle (because of higher drag) demands larger quantity of fuel (smaller annular gap). Also it points out that the wider range of launch angles can be achieved with a larger value of throat diameter, D_t. Now for the presentation of other control characteristics we have to choose a fixed engine configuration and a fuel type. An annular gap of 6.5 mm is chosen for the engine with bypass control of inlet air. Based on the results of the analysis for different launch angles and annular gaps and also taking into consideration the typical regression rate values reported in the literature for HTPB fuel,[28, 29] a value of $8.5 * 10^{-3}$ is assigned to '*A*'. The maximum possible value of 82 mm is used for D_t in order to have a wider range of launch angles. For the bypass control of inlet air, given the value of fuel-grain length and zero bypass ratio at touchdown, the inlet diameter comes out as a solution.

Bypass Control of Inlet Air

The percentage variations of bypass ratio for three different fuel-grain-lengths and their corresponding inlet diameters are shown in Fig. 9. Also shown are the percentage variations of the same at a fuel grain length of 1070 mm for launch angles of 30, 35, and 38 degrees. With the increase in grain length and the corresponding decrease in inlet diameter, the contribution of $\dot{m}_F$ to the total mass flow rate of combustion products, $\dot{m}_b$ (= captured air mass flow, $\dot{m}_{ac}$ - bypassed air mass flow, $\dot{m}_{ab}$ + $\dot{m}_F$) increases. Therefore the requirement of bypass control on inlet air decreases. But with the increase in launch angle as the projectile is required to operate at higher altitudes (wider environmental changes) the maximum bypass

control requirement increases. For a projectile of a given configuration the limitation on maximum launch angle comes because of the inability of the chosen throat to pass the required $\dot{m}_b$. The way to remove this limitation lies in the increase of throat diameter. But with the constraint of $D_t/D_p \leq 0.91$, for the chosen D_p the maximum possible $D_t = 0.91*D_p$, as indicated previously. Any further increase in D_t is possible only with the corresponding increase in D_p. Here, for the specified annular gap, this increase in D_p will in turn need a longer grain with an unrealistically slow fuel regression rate.

The equivalence ratio Φ is the ratio of the operating fuel/air ratio to the stoichiometric fuel/air ratio. The variations of Φ for three different grain lengths are shown in Fig. 10. Also shown are the variations of Φ at a fuel-grain length of 1070 mm for launch angles of 30, 35, and 38 degrees. The variation of grain length affects Φ and as expected the longer length could shift the engine operation to the fuel-rich side. By choosing an appropriate grain-length the engine can be made to operate near the desired equivalence ratio.

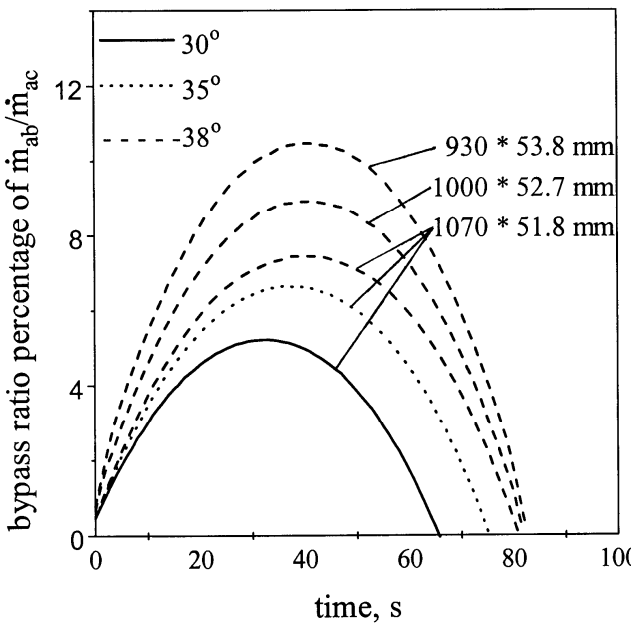

Fig. 9 Percentage variation of bypass ratio of inlet air. The nose ogival slenderness ratio is 2.5, the annular gap is 6.5 mm, the constant A in the regression rate equation is 8.5 x 10^{-3}, and the throat diameter is 82 mm

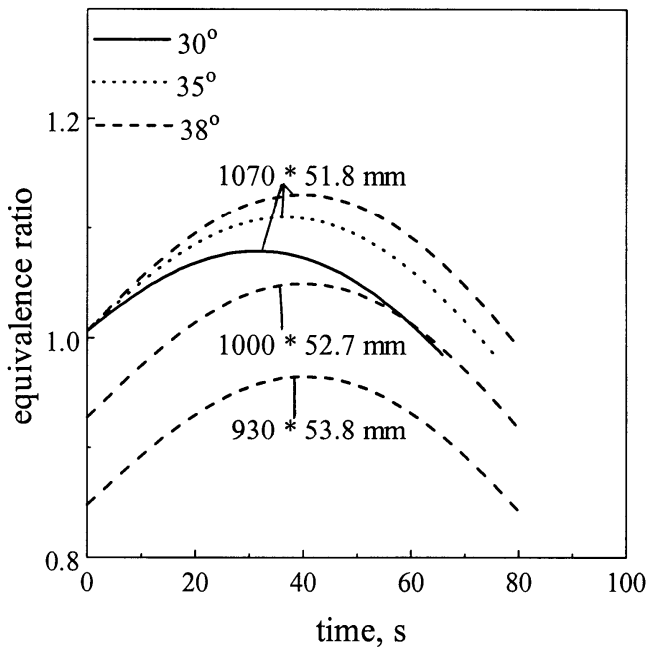

Fig. 10 Equivalence-ratio variations under bypass control of inlet air. The nose ogival ratio is 2.5, the annular gap is 6.5 mm, constant A in the regression rate equation is 8.5 x 10^{-3}, and the throat diameter is 82 mm.

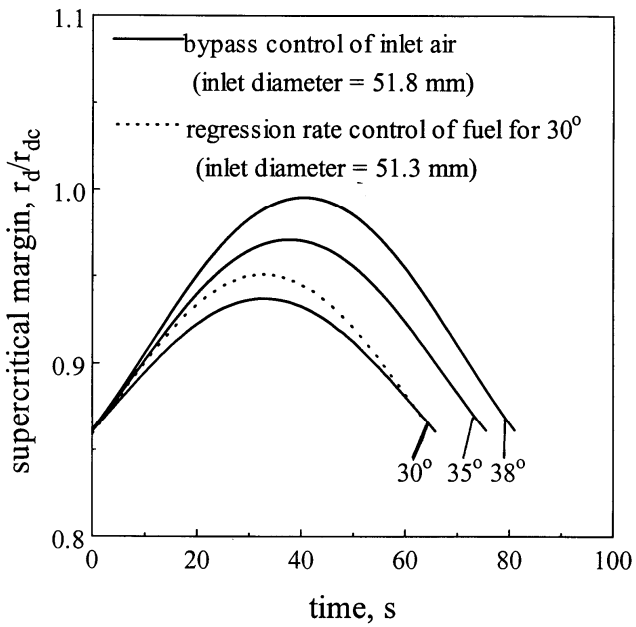

Fig. 11 Inlet operation under bypass control of inlet air. The fuel grain length is 1070 mm, the nose ogival slenderness ratio is 2.5, the annular gap is 6.5 mm, the constant A in the regression rate equation is 8.5 x 10^{-3}, and the throat diameter is 82 mm.

In this method of bypass control of inlet air as the inlet can operate in supercritical or critical mode, the enhanced stagnation-pressure-loss due to supercritical operation is of interest. This can be characterized by r_d/r_{dc}, where r_d (= p_{o2}/p_{oa}) is the *operating* stagnation-pressure-recovery ratio of inlet. Shown in Fig. 11 are the variations of r_d/r_{dc} at a fuel grain length of 1070 mm for launch angles of 30, 35, and 38 degrees. At a peak altitude as the actual engine has its throat diameter closest to the one of rubber engine (Fig. 8) the r_d/r_{dc} is at its maximum.

Maximum Launch Angle Capability

Using the control procedures[22] maximum launch angle capability of a projectile configuration can be calculated. The higher the launch angle the higher is the range, but the wider are the environmental changes. The limit on the maximum launch angle comes because of the inlet operating at critical condition at the corresponding peak altitude. Most ramjet systems are operated with a comfortable margin away from this critical condition. This is because many inlet designs including annular ones have no subcritical operating region. If such an inlet is operated at or near its critical condition then it is very easy to drive the inlet directly into its buzz condition. When this happens combustion blowout is imminent. By pass control of inlet air cannot be operated under subcritical mode. Therefore a "supercritical margin" for operation must be used and be based on a total knowledge of all geometries, engine pressure losses, and combustion characteristics. When these parameters are assumed from general literature, a safe "supercritical margin" of at least 5% may have to be assumed to fix the maximum launch angle capability.

Conclusions

Incorporating into it a propulsion system can substantially increase the velocity and range of a gun-launched projectile. Solid fuel ramjet is found to be the simplest and the most suitable system for this purpose. The countries which are taking interest in the application of solid fuel ramjets, in missile systems in general and in gun launched projectiles in particular, are China (Taiwan), Germany, Israel, Netherlands, Russia, Sweden, and USA.

For a solid fuel ramjet assisted projectile to operate under a pseudovacuum trajectory a set of fixed dimensions of fuel grain length, throat diameter, and inlet diameter can be chosen from a rubber-engine analysis. This choice gives the preliminary design configuration for the engine.

In the method of bypass control of inlet air the choice of fuel-grain length correspondingly fixes the inlet diameter. In this method, the control requirements decrease with the increase in fuel grain length. The mean operating fuel/air ratio increases with the increase in fuel grain length. Hence, by choosing an appropriate grain length, the engine can be made to operate near the desired fuel/air ratio condition. On the overall the control requirements are found to be minimal, exhibiting the self-throttling characteristics of solid fuel ramjets.

Calculations with conservative figures of merit indicate that a typical 155-mm gun launched projectile powered by a solid fuel ramjet can have an enhanced range in excess of 40 km.

References

[1]Fink, M. R., "Aerodynamic Properties of an Advanced Indirect Fire System (AIFS) Projectiles," *Journal of Spacecraft and Rockets*, Vol. 19, No. 1, 1982, pp. 36-40.

[2]Simpson, J. A., “Fight Dynamics of the Advanced Fire System (AIFS) - Cannon Launched Ramjet,” *Proceedings of 7th Int. Symposium on Ballistics*, The Hague, The Netherlands, 1983.

[3]Simpson, J. A., Krier, H., and Butler, P. B., “Interior Ballistics for Launch Dynamics for Advanced Indirect Fire System,” *Proceedings of 7th International Symposium on Ballistics*, The Hague, The Netherlands, 1983.

[4]Gany, A., “Analysis of Gun-Launched, Solid Fuel Ramjet Projectiles,” *Proceedings of the First International Symposium on Special Topics in Chemical Propulsion*, Athens, Greece, Nov. 1988 (*Base Bleed*, Edited by K. K. Kuo, Hemisphere Publishing Co., Washington, DC, 1991, pp. 289-309).

[5]Nusca, M. J., Chakravarthy, S. R., and Goldberg, U. C., “Computational Fluid Dynamics Capability for Solid Fuel Ramjet Projectile,” *Journal of Propulsion and Power*, Vol. 6, No. 3, 1990, pp. 256-262.

[6]Nusca, M. J., “Steady Flow Combustion Model for Solid Fuel Ramjet Projectile,” *Journal of Propulsion and Power*, Vol. 6, No. 3, 1990, pp. 348-352.

[7]Veraar, R. G., “Ramjet Applications of the Solid Fuel Combustion Chamber,” *Proceedings of Symposium on the Solid Fuel Combustion Chamber and Beyond*, Rijswijk, The Netherlands, 1991, pp. 129-146.

[8]Wimmerstrom, P., Nilsson, Y., and Gunners, N. E., “Initial Study of a 40 mm SFRJ Projectile,” *Proceedings of 14th International Symposium on Ballistics*, Vol. 1, Eds. Murphy, M. J., and Backofen, J. E., American Defense Preparedness Association, Arlington, VA, Sept. 1993, pp.721-733.

[9]Ivarsson, U., “Entirely up to Speed,” *International Defense Review*, Vol. 3, 1994, p. 63.

[10]Gany, A., and Netzer, D. W., "Fuel Performance Evaluation for the Solid Fueled Ramjet," *International Journal of Turbojet Engines*, Vol. 2, 1985, pp. 157-168.

[11]Schulte, G., "Fuel Regression and Flame Stabilization Studies of Solid Fuel Ramjets," *Journal of Propulsion and Power*, Vol. 2, 1986, pp. 301-304.

[12]Santhakumar, S., Madhavan, A., and Vijay, K. N., "Trajectory Simulation of a Thrust Controlled, SFRJ Propelled, Cannon Launched Projectile," *Journal of the Aeronautical Society of India*, Vol. 50, No. 2, 1998, pp. 93-99.

[13]Mahoney, J. J., *Inlets for Supersonic Missiles*, AIAA Education Series, Washington, DC, 1991, pp. 115-118, 185-187.

[14]"Refinement on Inlet Design Continues," *Aviation Week and Space Technology*, Vol. 94, No. 6, 1971, pp. 62-64.

[15]Keirsey, J. L., "Solid Fuel Ramjet Flow Control Device," United States Patent No. 628 688, 1986.

[16]"Solid Fuel Ramjet," United Technologies Chemical System, San Jose, CA, 1980.

[17]Vaught, C., Witt, M., Netzer, D. W., and Gany, A., "Investigation of Solid Fuel Combustion Ramjets," *Journal of Propulsion and Power*, Vol. 8, 1992, pp.1004-1011.

[18]Veraar, R. G., "Ramjet Applications of the Solid Fuel Combustion Chamber," *Proceedings of the Symposium on The Solid Fuel Combustion Chamber and Beyond*, Rijswijk, The Netherlands, 1991, pp. 129-146.

[19]Yang, J. T., and Wu, C. Y. Y. "Solid-Fuel Regression During Ignition Transient in a Ramjet," *Proceedings of the 25th International Symposium on Combustion*, The Combustion Institute, Pittsburg, PA, 1994, pp. 1603-1608.

[20]Myers, T. D., "Special Problems of Ramjet with Solid Fuel," *Ramjet and Ramrocket Propulsion Systems for Missiles*, AGARD PEP Lecture Series 136, 1984.

[21]*Airbreathing Propulsion for Missiles and Projectiles*, AGARD Conference Proceedings, Vol. 526, 1992, p. T5.

[22]Krishnan, S., Philmon George, and Sathyan, S., “Design and Control of Solid Fuel Ramjet for Pseudo Vacuum Trajectories,” *Journal of Propulsion and Power*, Vol. 16, Sept. - Oct. 2000, pp. 815-822.

[23]Netzer, A., and Gany, A., “Burning and Flameholding Characteristics of a Miniature Solid Fuel Ramjet Combustor,” *Journal of Propulsion and Power*, Vol. 7, No. 3, 1991, pp. 357-363.

[24]Wooldridge, R. C., and Netzer, D. W., “Ignition and Flammability Characteristics of Solid Fuel Ramjets,” *Journal of Propulsion and Power*, Vol. 1, No. 5, 1991, pp. 846-848.

[25]Anderson, J. D., *Modern Compressible Flow with Historical Perspective*, McGraw-Hill International Editions, New York, 1990, pp. 294-306.

[26]Philmon George, “Solid Fuel Regression Rate Studies in Hybrid Rockets and Solid Fuel Ramjets,” Ph. D. Thesis, Department of Aerospace Engineering, Indian Institute of Technology Madras, Chennai, India, 1998.

[27]Krishnan, S., and George, P., "Solid Fuel Ramjet Combustor Design," *Progress in Aerospace Sciences*, Vol. 34, 1998, pp. 219-256.

[28]Leisch, S., and Netzer, D. W., “Solid Fuel Ramjets,” *Tactical Missile Propulsion*, edited by Jenson, G. E., and Netzer, D. W., Vol. 170, Progress in Astronautics and Aeronautics, AIAA, Washington, DC, 1996, pp. 469-496.

[29]Harder, I., and Gany, A., "Fuel Regression Rate Mechanism in a Solid Fuel Ramjet," *Propellants, Explosives, and Pyrotechnics*, Vol. 17, No. 3, 1992, pp. 70-76.